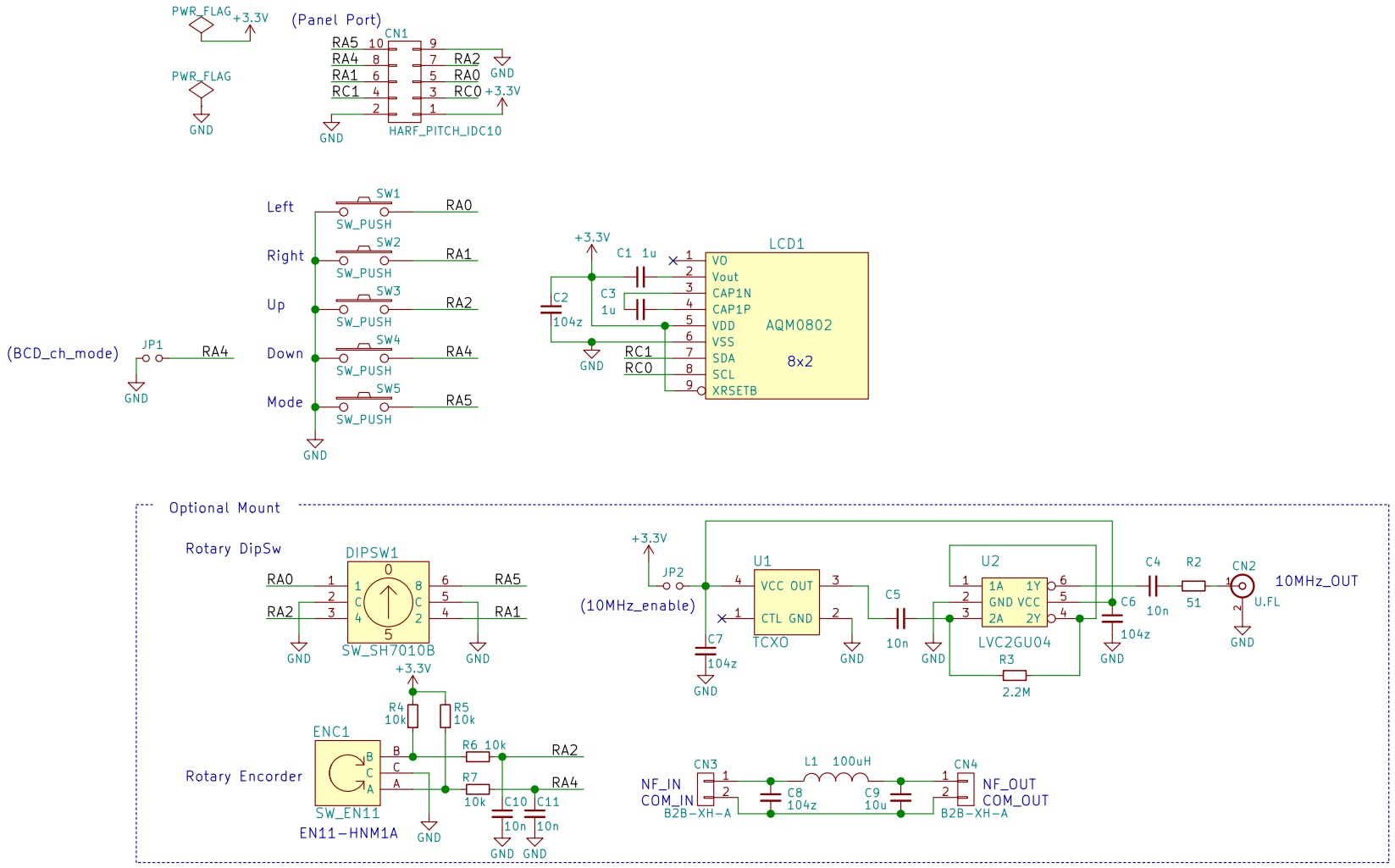

AUX4

Sheet: /
File: AUX4.sch

Title:

Size: A4	Date:	**Rev:**
KiCad E.D.A. kicad 4.0.1-stable		Id: 1/1